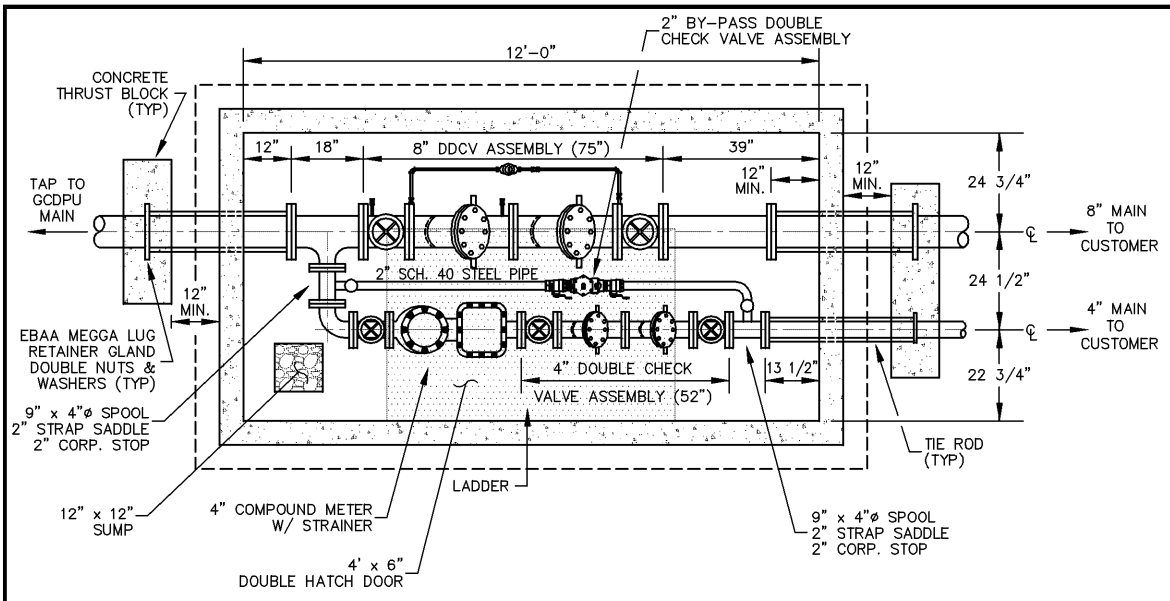

PLAN VIEW

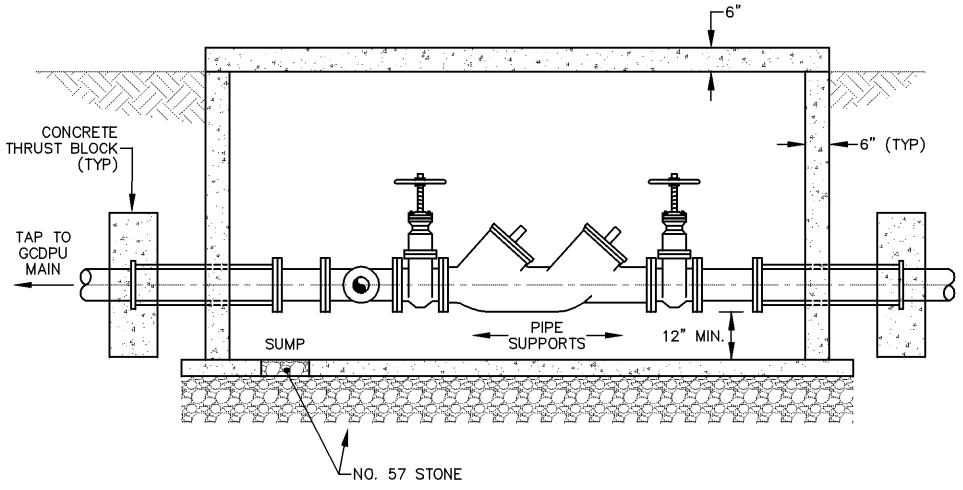

SIDE VIEW
TYP.

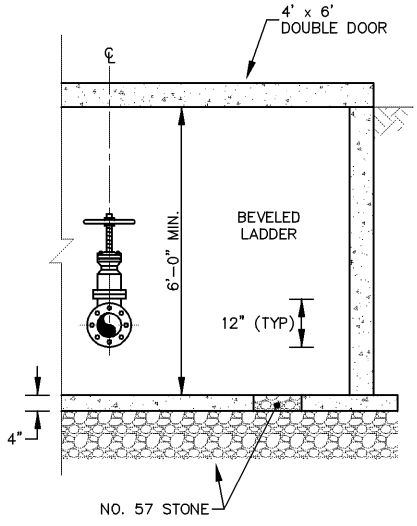

END VIEW

VAULT SPECIFICATIONS

1. THIS DRAWING SHALL BE USED FOR INSTALLATION OF 8" DOUBLE DETECTOR CHECK VALVE WITH 4" COMPOUND METER.
2. ALL PIPE AND FITTINGS SHALL BE FLANGED DUCTILE IRON PIPE, EXCEPT WHERE NOTED.
3. VAULT TOP SHALL BE 6" THICK REINFORCED CONCRETE. MINIMUM INSIDE HEIGHT IS 6'-0". VAULT BOTTOM IS 4" CONCRETE SLAB SLOPED TO 12" x 12" DRAIN SUMP HOLE. SLAB TO BE POURED ON 12" OF COMPACTED NO. 57 STONE. HATCH OPENING SHALL BE TO ONE SIDE OF VAULT AT THE CENTER POINT OF THE WALL.
4. HATCH SHALL BE BILCO ALUMINUM MODEL JD-4AL OR EQUAL APPROVED IN ADVANCE BY GCDPU.
5. VAULT INLET/OUTLET OPENINGS SHALL BE SEALED WITH CONCRETE OR BRICK AND MORTAR AROUND PIPE. PIPE MUST NOT SUPPORT VAULT.
6. VAULT SHALL BE PRECAST FOR NON-LOAD BEARING APPLICATION. WHEN VAULT WILL BE SUBJECTED TO LIVE LOAD, CUSTOMER'S ENGINEER SHALL SUBMIT DETAILED VAULT DESIGN FOR GCDPU APPROVAL IN ADVANCE OF CONSTRUCTION.
7. ACCESS LADDER - SHALL BE DOWELED TO WALL AND CENTERED AT HATCH OPENING.
8. ALL CHECK VALVE AND METER ASSEMBLIES SHALL BE SUPPORTED IN TWO (2) PLACES ON CAP BLOCKS OR STEEL. NO WOOD IS ALLOWED.
9. THRUST BLOCKS - SHALL CONFORM TO GCDPU DRAWING NO. A-24 (LATEST REVISION).
10. THRUST TIE RODS - SHALL CONFORM TO GCDPU DRAWING NO.'S A-33, A-74, AND A-78. RODS SHALL EXTEND FROM FIRST FLANGE INSIDE VAULT TO TAPPING VALVE (WELDED TO CASING ON LONG SIDE BORE).
11. 8" DOUBLE DETECTOR CHECK VALVE ASSEMBLY SHALL BE WATTS MODEL 709 DCDA, HERSEY MODEL DDC-II, FEBCO MODEL 856, AMES MODEL 3000 SS, OR EQUAL APPROVED IN ADVANCE BY GCDPU.

    4" DOUBLE CHECK VALVE ASSEMBLY SHALL BE WATTS MODEL 709, HERSEY MODEL HDC, FEBCO MODEL 850, AMES MODEL 2000 SS, OR EQUAL APPROVED IN ADVANCE BY GCDPU.

    2" DOUBLE CHECK VALVE ASSEMBLY SHALL BE WATTS MODEL 007U, HERSEY MODEL #2, FEBCO MODEL 850U, AMES MODEL 2000SE, OR EQUAL APPROVED IN ADVANCE BY GCDPU.

    8" AND 4" CHECK VALVES SHALL BE EQUIPPED WITH OS&Y RESILIENT SEATED GATE VALVES.
12. GCDPU SHALL FURNISH FIRE METER WITH STRAINER. ALL OTHER MATERIALS SHALL BE FURNISHED BY CUSTOMER.
13. DOUBLE DETECTOR CHECK VALVE ASSEMBLY DIMENSIONS SHOWN ARE FOR WATTS MODEL 709 DCDA. 4" DOUBLE CHECK VALVE ASSEMBLY DIMENSIONS ARE FOR WATTS MODEL 709. OTHER VALVE ASSEMBLY DIMENSIONS MAY VARY.
14. VAULT SHALL BE INSTALLED ON PRIVATE PROPERTY. CUSTOMER MUST PROVIDE A 15' x 30' EASEMENT AND/OR RIGHT OF ENTRY CLAUSE.
15. MINIMUM CLEARANCE FROM VAULT FLOOR TO BOTTOM OF FLANGES SHALL BE 12".
16. VALVE PAD AND VALVE MARKER SHALL BE INSTALLED WHERE APPROPRIATE.

NOTES

1. NO WORK SHALL BEGIN WITHOUT OBTAINING "CONSTRUCTION PERMIT" FROM THE DEPARTMENT OF PUBLIC UTILITIES (GCDPU).
2. NO TAPS TO GWINNETT COUNTY WATER MAINS SHALL BE MADE WITHOUT THE INSPECTOR PRESENT.
3. ALL BACKFLOW PREVENTION DEVICES SHALL MEET OR EXCEED GCDPU SPECIFICATIONS.
4. ALL BACKFLOW PREVENTION DEVICES MUST BE TESTED BY A TESTER FROM THE GWINNETT COUNTY APPROVED TESTERS LIST BEFORE A FINAL C.O. WILL BE ISSUED. (AN APPROVED TESTERS LIST MAY BE OBTAINED BY CALLING 678-376-6907.)

BOARD OF COMMISSIONERS OF GWINNETT COUNTY
DECEMBER 5, 1988
GEORGIA

GWINNETT COUNTY
DEPARTMENT OF PUBLIC UTILITIES
BACKFLOW PREVENTION

"A community-environmental health protection program"

8" DOUBLE DETECTOR CHECK VALVE WITH 4" COMPOUND METER

DRAWN BY: JDS	DATE: 07-21-04	SCALE: N.T.S.